MSL - ADJUSTABLE COTTON REEL EXTENSION SERIES 1 & 3
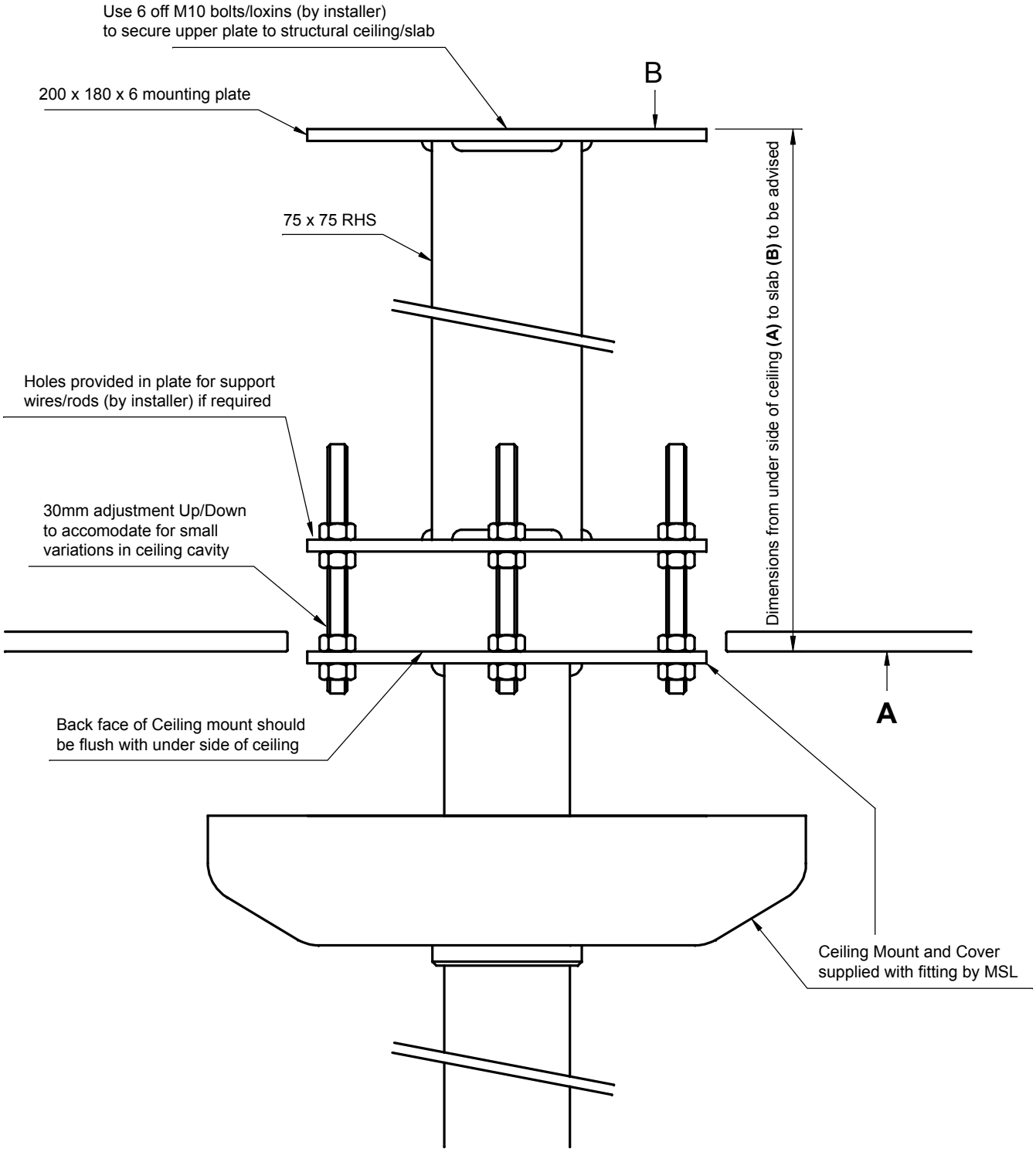
ALSO AVAILABLE AS A FIXED LENGTH COTTEN REEL
Please contact MSL for further details